REVISIONS					
ECN	REV	DESCRIPTION	ZONE	BY	DATE
27701	A	NEW RELEASE		JDO	1/26/2023
29912	B	UPDATE ADAPTERS	D5	JDS	1/5/2024
30472	C	UPDATE ADAPTERS	C4	JDS	4/19/2024
30511	D	UPDATE ADAPTERS	D5	JDS	4/30/2024
30959	E	UPDATE ADAPTERS	B2, E1	JDS	8/8/2024

ITEM NO.	PART NUMBER	QTY	DESCRIPTION
1	1026016	1	ASSEMBLY, ENGINE WITH PUMPS, KUBOTA, 211 HP, 8680
2	1012928	1	TRANSMITTER,PRESSURE,SAE 6,0 - 5800 PSI
3	FS6400-12-16-O	2	ADAPTER, STRAIGHT, -12 ORFS / -16 O-RING
4	FS6400-10-10-O	2	ADAPTER, STRAIGHT, -10 ORFS / -10 O-RING
5	FS6801-12-16-NWO-FG	2	ADAPTER, ELBOW, 90 DEG, -12 ORFS / -16 O-RING
6	FS6801-12-12-NWO-FG	1	ADAPTER, ELBOW, 90 DEG, -12 ORFS / -12 O-RING
7	FS6801-04-06-NWO-FG	3	ADAPTER, ELBOW, 90 DEG, -4 ORFS / -6 O-RING
8	FS6804-12-12-12-NWO-FG	1	ADAPTER, RUN TEE, -12 ORFS / -12 O-RING / -12 ORFS
9	1901-40	1	CLAMP, SPLIT FLANGE, CODE 61, -40
10	1902-20	1	CLAMP, SPLIT FLANGE, CODE 62, -20
11	FS1804-20-20-FG	1	ADAPTER, 90 DEG, CODE 62, -20 ORFS / -20 FLANGE
12	4 C5OLO-S 1SF100	1	ADAPTER, 90 DEG, 100µ SCREEN, -4 ORFS / -4 O-RING
13	FS6400-16-16-O	2	ADAPTER, STRAIGHT, -16 ORFS / -16 O-RING
14	FS6801-10-10-NWO-FG	1	ADAPTER, ELBOW, 90 DEG, -10 ORFS / -10 O-RING
15	FS6801-10-12-NWO-FG	1	ADAPTER, ELBOW, 90 DEG, -10 ORFS / -12 O-RING

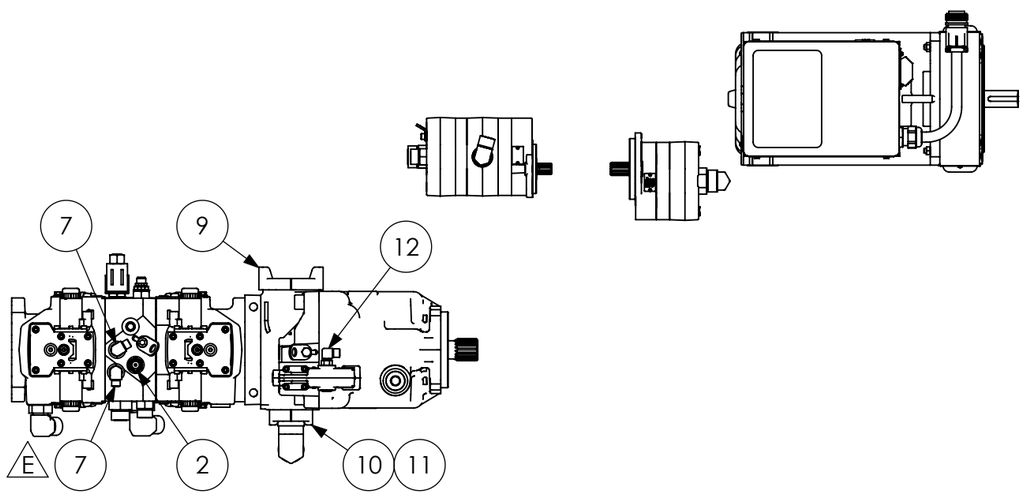

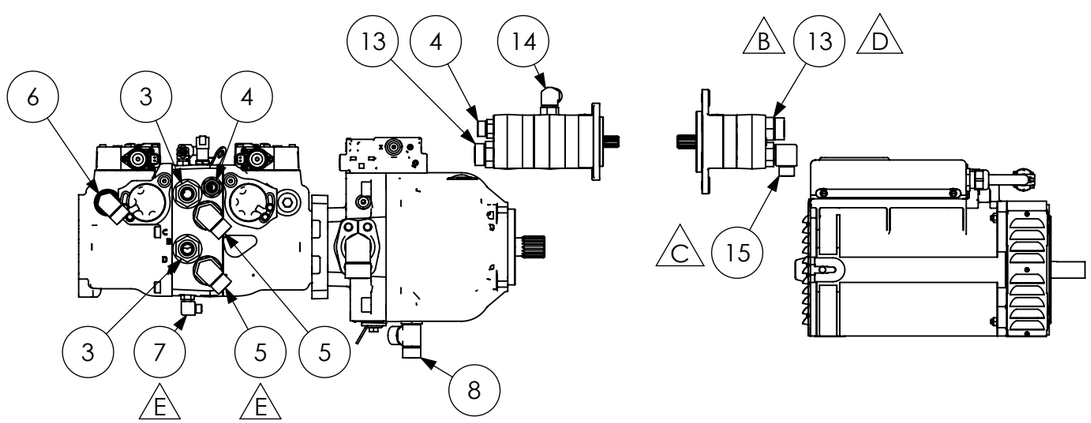

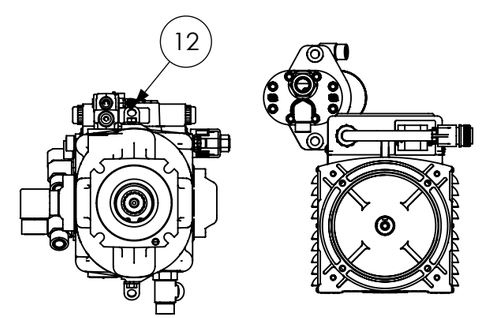

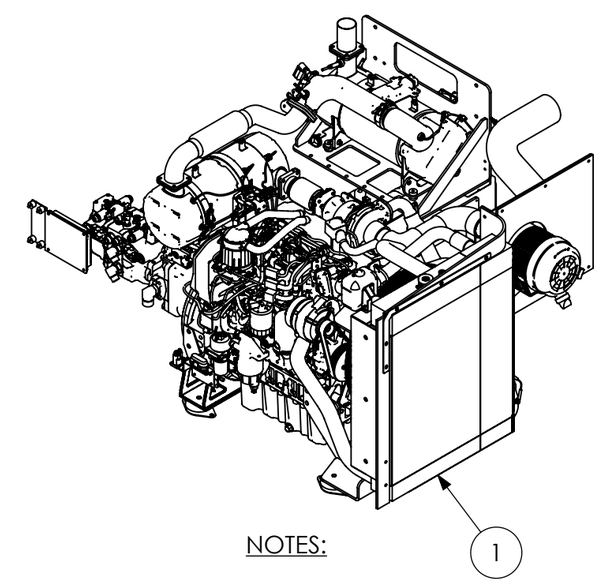

NOTES:

1.

GENERAL FABRICATION TOLERANCE - INCH								
>	0.000	3.000	12.000	24.000	48.000	96.000	120.000	240.000
≤	3.000	12.000	24.000	48.000	96.000	120.000	240.000	~
±	0.015	0.031	0.063	0.094	0.125	0.188	0.250	0.500
ANGLE	±0.5°		±1.0°		±2.0°		±3.0°	

SURFACE: 250

GENERAL MACHINING TOLERANCE					
0.000	1.000	3.000	6.000	12.000	36.000
1.000	3.000	6.000	12.000	36.000	~
0.005	0.010	0.015	0.031	0.063	0.094
±0.1°		±0.3°		±0.5°	

SURFACE: 125

FINISH PER LEEBOY SPECIFICATION DRAWING 1014877

DIMENSIONS ARE IN INCHES UNLESS OTHERWISE SPECIFIED

DIMENSIONS APPLY TO FINISHED PART. ROUGH CUTS MUST INCLUDE APPROPRIATE STOCK ALLOWANCE FOR MACHINED PARTS.

(REFERENCE DIMENSIONS)

REFER TO TABLES FOR GENERAL TOLERANCES

SHEET SCALE: 1:10

LeeBoy

ST ENGINEERING LEEBOY, dba LEEBOY
500 LINCOLN COUNTY PARKWAY EXT
LINCOLNTON, NC 28092

APPROVALS		DATE
DRAWN BY	JDO	01/26/2023
CHECKED BY	TWJ	09/09/2024

INFORMATION CONTAINED ON THIS DRAWING IS THE SOLE PROPERTY OF LEEBOY. ANY REPRODUCTION IN PART OR WHOLE WITHOUT THE WRITTEN PERMISSION OF LEEBOY IS PROHIBITED

THIRD ANGLE PROJECTION | SHT SIZE: B

1027397

ASSEMBLY, ENGINE WITH PUMPS, KUBOTA, WITH ADAPTERS, 8680

PAVER / MULTIPLE

REV E

SHT 1 OF 1 | PART WEIGHT: 3766.44 LBS