REVISIONS					
ECN	REV	DESCRIPTION	ZONE	BY	DATE
29847	A	NEW RELEASE		JDS	11/20/2023

ITEM NO.	PART NUMBER	QTY	DESCRIPTION
1	1019696	1	MANIFOLD, MOLDBOARD SLIDE CYCLINDERS
2	FS6400-06-06-O	4	ADAPTER, STRAIGHT, -6 ORFS / -6 O-RING
3	FS6801-06-06-NWO-FG	2	ADAPTER, ELBOW, 90 DEG, -6 ORFS / -6 O-RING
4	100-4-20-32-5	2	CSHH,1/4-20 X 2,GR5
5	302-4	2	WASHER, LOCK, 1/4
6	300-4	2	WASHER, FLAT, SAE, 1/4

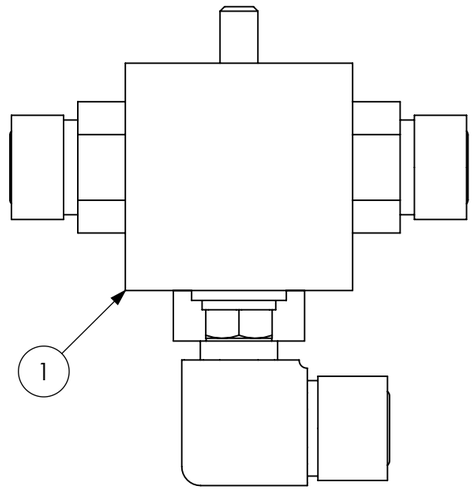

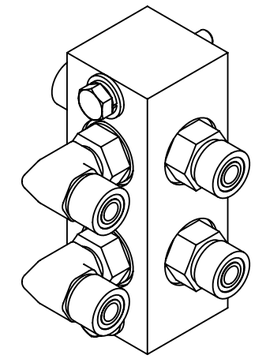

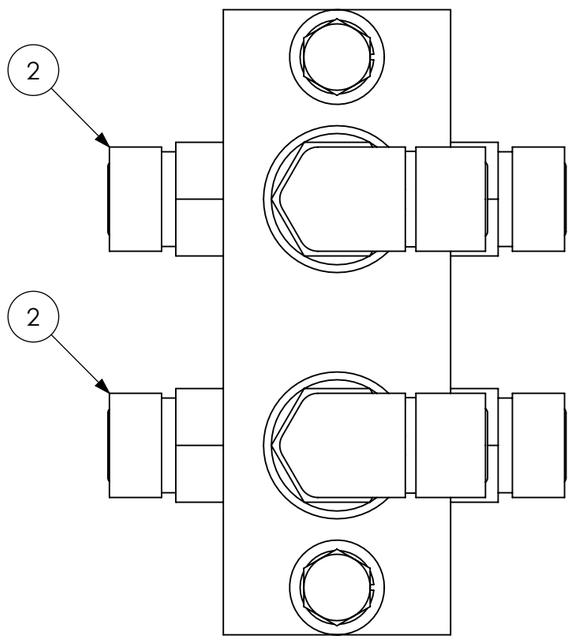

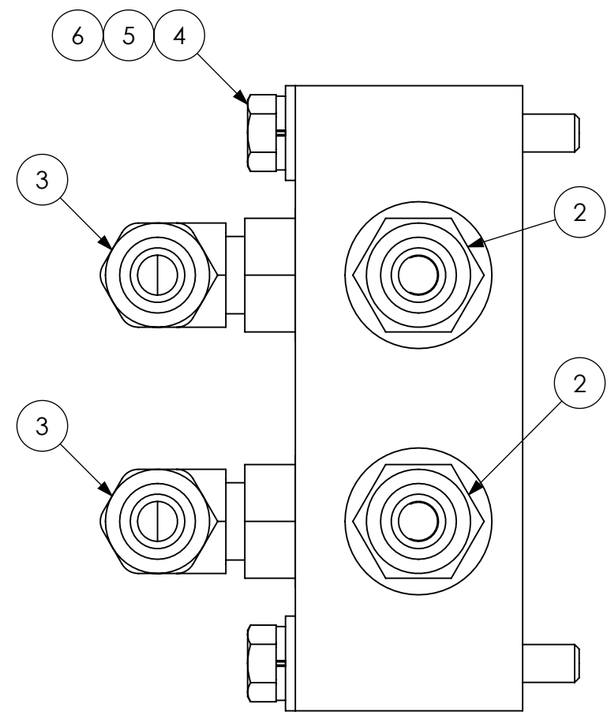

NOTES:

1.

FINISH PER LEEBOY SPECIFICATION DRAWING 1014877

GENERAL FABRICATION TOLERANCE - INCH									SURFACE: 250
>	0.000	3.000	12.000	24.000	48.000	96.000	120.000	240.000	
≤	3.000	12.000	24.000	48.000	96.000	120.000	240.000	~	
±	0.015	0.031	0.063	0.094	0.125	0.188	0.250	0.500	
ANGLE	±0.5°		±1.0°		±2.0°		±3.0°		

GENERAL MACHINING TOLERANCE						SURFACE: 125
0.000	1.000	3.000	6.000	12.000	36.000	
1.000	3.000	6.000	12.000	36.000	~	
0.005	0.010	0.015	0.031	0.063	0.094	
±0.1°		±0.3°		±0.5°		

DIMENSIONS ARE IN INCHES UNLESS OTHERWISE SPECIFIED

DIMENSIONS APPLY TO FINISHED PART. ROUGH CUTS MUST INCLUDE APPROPRIATE STOCK ALLOWANCE FOR MACHINED PARTS.

(REFERENCE DIMENSIONS)

REFER TO TABLES FOR GENERAL TOLERANCES

SHEET SCALE: 1:1

LeeBoy

ST ENGINEERING LEEBOY,
dba LEEBOY
500 LINCOLN COUNTY
PARKWAY EXT
LINCOLNTON, NC 28092

APPROVALS		DATE
DRAWN BY	JDS	11/20/2023
CHECKED BY	TWJ	11/22/2023

INFORMATION CONTAINED ON THIS DRAWING IS THE SOLE PROPERTY OF LEEBOY. ANY REPRODUCTION IN PART OR WHOLE WITHOUT THE WRITTEN PERMISSION OF LEEBOY IS PROHIBITED

THIRD ANGLE PROJECTION | SHT SIZE: B

1028638

ASSEMBLY, MANIFOLD, AUGER LIFT, 8680

PAVER / MULTIPLE

REV A

SHT 1 OF 1 | PART WEIGHT: 1.72 LBS